## 8.1 6T3 7T3 IE3 trifase / *three phase*

71-132 B3

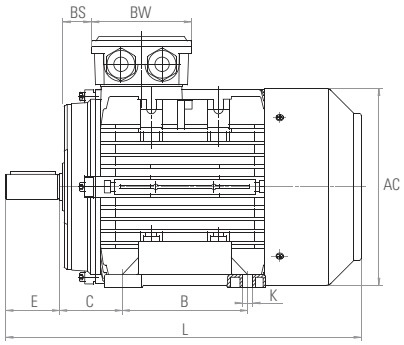


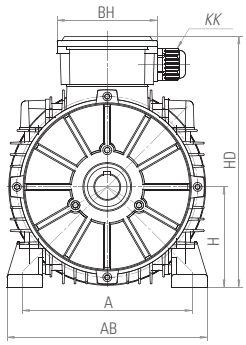


160-280 B3

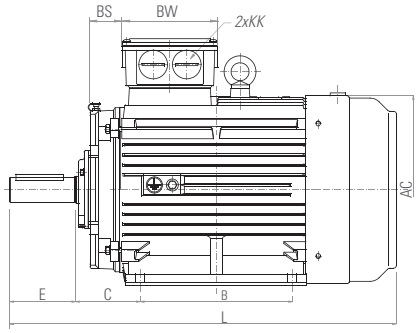


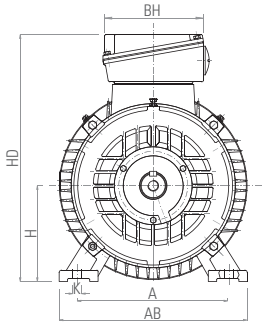


315-355 B3

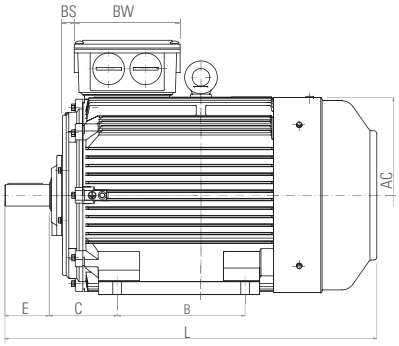


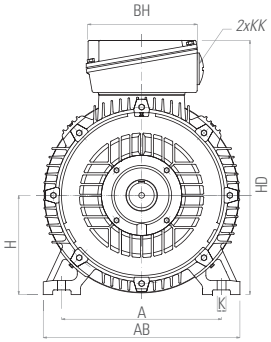


355LX-400 B3

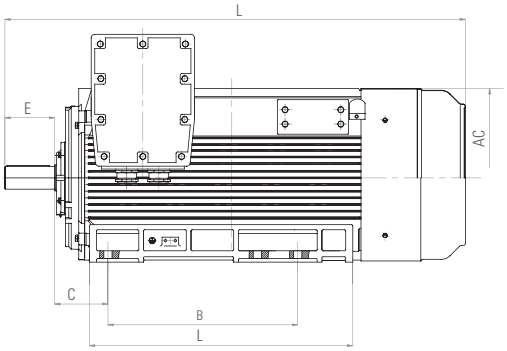


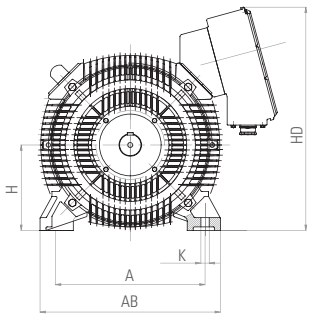

# 71÷400

| B3 | | | | | | | | | | | | | | | | | | |
|---|---|---|---|---|---|---|---|---|---|---|---|---|---|---|---|---|---|---|
| | A | AB | B | C | K | AC | HD | D | DH | E | F | G | H | KK | L | BS | BW | BH |
| 71-132 B3 | | | | | | | | | | | | | | | | | | |
| 71 | 112 | 132 | 90 | 45 | 7X10 | 145 | 183 | 14 | M5X12 | 30 | 5 | 11 | 71 | M20X1.5 | 255 | 20 | 94 | 94 |
| 80 | 125 | 160 | 100 | 50 | 10X15 | 165 | 210 | 19 | M6X16 | 40 | 6 | 15,5 | 80 | M20X1.5 | 277 | 27 | 105 | 105 |
| 90S | 140 | 175 | 100 | 56 | 10X15 | 185 | 230 | 24 | M8X20 | 50 | 8 | 20 | 90 | M20X1.5 | 312 | 26 | 105 | 105 |
| 90L | 140 | 175 | 125 | 56 | 10X15 | 185 | 230 | 24 | M8X20 | 50 | 8 | 20 | 90 | M20X1.5 | 337 | 26 | 105 | 105 |
| 90LB | 140 | 175 | 125 | 56 | 10X15 | 185 | 230 | 24 | M8X20 | 50 | 8 | 20 | 90 | M20X1.5 | 365 | 26 | 105 | 105 |
| 100L | 160 | 196 | 140 | 63 | 12X16 | 205 | 255 | 28 | M10X22 | 60 | 8 | 24 | 100 | M20X1.5 | 375 | 26 | 105 | 105 |
| 100LC | 160 | 196 | 140 | 63 | 12X16 | 205 | 255 | 28 | M10X22 | 60 | 8 | 24 | 100 | M20X1.5 | 411 | 26 | 105 | 105 |
| 112M(MB2) | 190 | 220 | 140 | 70 | 12X16 | 230 | 278 | 28 | M10X22 | 60 | 8 | 24 | 112 | M25X1.5 | 400 | 34 | 112 | 112 |
| 112MB | 190 | 220 | 140 | 70 | 12X16 | 230 | 278 | 28 | M10X22 | 60 | 8 | 24 | 112 | M25X1.5 | 417 | 34 | 112 | 112 |
| 132S | 216 | 252 | 140 | 89 | 12X16 | 270 | 320 | 38 | M12X28 | 80 | 10 | 33 | 132 | M25X1.5 | 460 | 40 | 112 | 112 |
| 132M | 216 | 252 | 178 | 89 | 12X16 | 270 | 320 | 38 | M12X28 | 80 | 10 | 33 | 132 | M25X1.5 | 500 | 40 | 112 | 112 |
| 160-280 B3 | | | | | | | | | | | | | | | | | | |
| 160M | 254 | 320 | 210 | 108 | 14X19 | 330 | 425 | 42 | M16X36 | 110 | 12 | 37 | 160 | M32X1.5 | 660 | 92 | 150 | 180 |
| 160L | 254 | 320 | 254 | 108 | 14X19 | 330 | 425 | 42 | M16X36 | 110 | 12 | 37 | 160 | M32X1.5 | 685 | 92 | 150 | 180 |
| 180M | 279 | 350 | 241 | 121 | 14X22 | 380 | 460 | 48 | M16X36 | 110 | 14 | 42.5 | 180 | M32X1.5 | 725 | 92 | 150 | 180 |
| 180L | 279 | 350 | 279 | 121 | 14X22 | 380 | 460 | 48 | M16X36 | 110 | 14 | 42.5 | 180 | M32X1.5 | 775 | 92 | 150 | 180 |
| 200L | 318 | 395 | 305 | 133 | 18X25 | 420 | 515 | 55 | M20X42 | 110 | 16 | 49 | 200 | M40X1.5 | 785 | 100 | 180 | 215 |
| 225S4 | 356 | 436 | 286 | 149 | 18X28 | 465 | 560 | 60 | M20X42 | 140 | 18 | 53 | 225 | M40X1.5 | 835 | 100 | 180 | 215 |
| 225M2 | 356 | 436 | 311 | 149 | 18X28 | 465 | 560 | 55 | M20X42 | 110 | 16 | 49 | 225 | M40X1.5 | 825 | 100 | 180 | 215 |
| 225M4-6 | 356 | 436 | 311 | 149 | 18X28 | 465 | 560 | 60 | M20X42 | 140 | 18 | 53 | 225 | M40X1.5 | 860 | 100 | 180 | 215 |
| 250M2 | 406 | 495 | 349 | 168 | 24X33 | 520 | 625 | 60 | M20X42 | 140 | 18 | 53 | 250 | M50X1.5 | 940 | 105 | 215 | 260 |
| 250M4-6 | 406 | 495 | 349 | 168 | 24X33 | 520 | 625 | 65 | M20X42 | 140 | 18 | 58 | 250 | M50X1.5 | 945 | 105 | 215 | 260 |
| 280S2 | 457 | 550 | 368 | 190 | 24X35 | 570 | 685 | 65 | M20X42 | 140 | 18 | 58 | 280 | M50X1.5 | 970 | 105 | 215 | 260 |
| 280S4-6 | 457 | 550 | 368 | 190 | 24X35 | 570 | 685 | 75 | M20X42 | 140 | 20 | 67.5 | 280 | M50X1.5 | 975 | 105 | 215 | 260 |
| 280M2 | 457 | 550 | 419 | 190 | 24X35 | 570 | 685 | 65 | M20X42 | 140 | 18 | 58 | 280 | M50X1.5 | 1010 | 105 | 215 | 260 |
| 280M4-6 | 457 | 550 | 419 | 190 | 24X35 | 570 | 685 | 75 | M20X42 | 140 | 20 | 67.5 | 280 | M50X1.5 | 1015 | 105 | 215 | 260 |
| 315-355 B3 | | | | | | | | | | | | | | | | | | |
| 315S2 | 508 | 630 | 406 | 216 | 28X45 | 620 | 815 | 65 | M20X42 | 140 | 18 | 58 | 315 | M63X1.5 | 1150 | 105 | 285 | 330 |
| 315S4-6 | 508 | 630 | 406 | 216 | 28X45 | 620 | 815 | 80 | M20X42 | 170 | 22 | 71 | 315 | M63X1.5 | 1185 | 105 | 285 | 330 |
| 315M2 | 508 | 630 | 457 | 216 | 28X45 | 620 | 815 | 65 | M20X42 | 140 | 18 | 58 | 315 | M63X1.5 | 1260 | 105 | 285 | 330 |
| 315M4-6 | 508 | 630 | 457 | 216 | 28X45 | 620 | 815 | 80 | M20X42 | 170 | 22 | 71 | 315 | M63X1.5 | 1295 | 105 | 285 | 330 |
| 315L2 | 508 | 630 | 508 | 216 | 28X45 | 620 | 815 | 65 | M20X42 | 140 | 18 | 58 | 315 | M63X1.5 | 1265 | 105 | 285 | 330 |
| 315L4-6 | 508 | 630 | 508 | 216 | 28X45 | 620 | 815 | 80 | M20X42 | 170 | 22 | 71 | 315 | M63X1.5 | 1310 | 105 | 285 | 330 |
| 355M2 | 610 | 735 | 560 | 254 | 28X49 | 700 | 1000 | 75 | M24X50 | 140 | 20 | 67.5 | 355 | M63X1.5 | 1510 | 100 | 360 | 410 |
| 355M4-6 | 610 | 735 | 560 | 254 | 28X49 | 700 | 1000 | 100 | M24X50 | 210 | 28 | 86 | 355 | M63X1.5 | 1640 | 100 | 360 | 410 |
| 355L2 | 610 | 735 | 630 | 254 | 28X49 | 700 | 1000 | 75 | M24X50 | 140 | 20 | 67.5 | 355 | M63X1.5 | 1610 | 100 | 360 | 410 |
| 355L4-6 | 610 | 735 | 630 | 254 | 28X49 | 700 | 1000 | 100 | M24X50 | 210 | 28 | 86 | 355 | M63X1.5 | 1670 | 100 | 360 | 410 |
| 355LX-400 B3 | | | | | | | | | | | | | | | | | | |
| 355LX2 | 630 | 760 | 800 | 254 | 35 | 760 | 980 | 75 | M20X42 | 140 | 20 | 67,5 | 355 | -/- | 1850 | 105 | 430 | 485 |
| 355LX4-6 | 630 | 760 | 800 | 254 | 35 | 760 | 980 | 100 | M20X42 | 210 | 28 | 86 | 355 | -/- | 1950 | 105 | 430 | 485 |
| 400 2 | 710 | 840 | 900 | 280 | 35 | 840 | 1060 | 85 | M24X50 | 170 | 22 | 76 | 400 | -/- | 1910 | 147 | 430 | 485 |
| 400 4-6 | 710 | 840 | 900 | 280 | 35 | 840 | 1060 | 120 | M24X50 | 210 | 32 | 109 | 400 | -/- | 1990 | 147 | 430 | 485 |

Dati tecnici e caratteristiche possono subire variazioni / *Technical data and performances may change*

## 6T3 7T3 IE3 trifase / *three phase*

71-132 B5

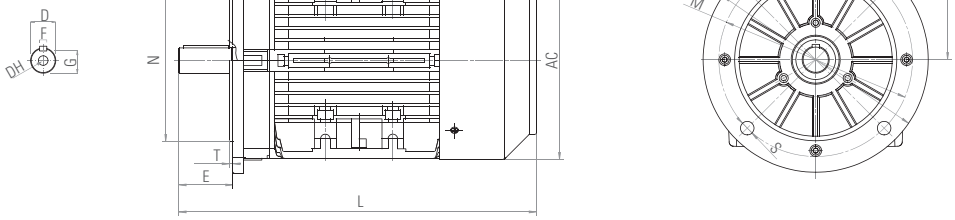


160-280 B5

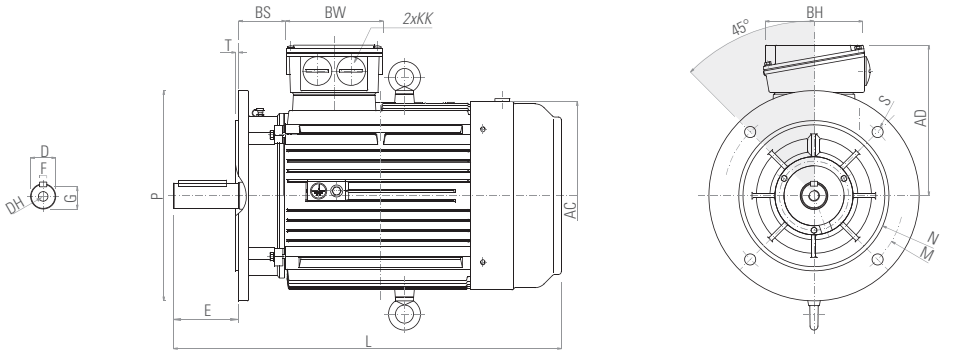


315-355 B5

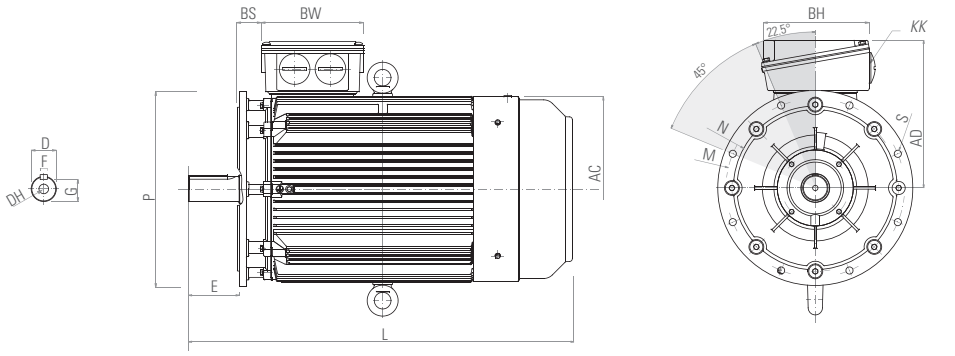


355LX-400 B5

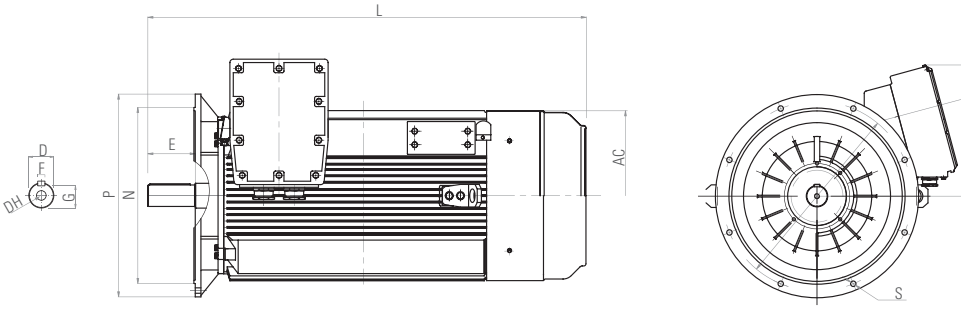

# 71÷400

| B5 | P | M | N | S | T | AC | HD | D | DH | E | F | G | H | KK | L | BS | BW | BH |
|---|---|---|---|---|---|---|---|---|---|---|---|---|---|---|---|---|---|---|
| 71-132 B5 | | | | | | | | | | | | | | | | | | |
| 71 | 112 | 132 | 90 | 45 | 7X10 | 145 | 183 | 14 | M5X12 | 30 | 5 | 11 | 71 | M20X1.5 | 255 | 20 | 94 | 94 |
| 80 | 200 | 165 | 130 | 12 | 3.5 | 165 | 130 | 19 | M6X16 | 40 | 6 | 15.5 | 80 | M20X1.5 | 277 | 27 | 105 | 105 |
| 90S | 200 | 165 | 130 | 12 | 3.5 | 185 | 140 | 24 | M8X20 | 50 | 8 | 20 | 90 | M20X1.5 | 312 | 26 | 105 | 105 |
| 90L | 200 | 165 | 130 | 12 | 3.5 | 185 | 140 | 24 | M8X20 | 50 | 8 | 20 | 90 | M20X1.5 | 337 | 26 | 105 | 105 |
| 90LB | 200 | 165 | 130 | 12 | 3.5 | 185 | 140 | 24 | M8X20 | 50 | 8 | 20 | 90 | M20X1.5 | 365 | 26 | 105 | 105 |
| 100L | 250 | 215 | 180 | 15 | 4 | 205 | 155 | 28 | M10X22 | 60 | 8 | 24 | 100 | M20X1.5 | 375 | 26 | 105 | 105 |
| 100LC | 250 | 215 | 180 | 15 | 4 | 205 | 155 | 28 | M10X22 | 60 | 8 | 24 | 100 | M20X1.5 | 411 | 26 | 105 | 105 |
| 112M(MB2) | 250 | 215 | 180 | 15 | 4 | 230 | 166 | 28 | M10X22 | 60 | 8 | 24 | 112 | M25X1.5 | 400 | 34 | 112 | 112 |
| 112MB | 250 | 215 | 180 | 15 | 4 | 230 | 166 | 28 | M10X22 | 60 | 8 | 24 | 112 | M25X1.5 | 417 | 34 | 112 | 112 |
| 132S | 300 | 265 | 230 | 15 | 4 | 270 | 188 | 38 | M12X28 | 80 | 10 | 33 | 132 | M25X1.5 | 460 | 40 | 112 | 112 |
| 132M | 300 | 265 | 230 | 15 | 4 | 270 | 188 | 38 | M12X28 | 80 | 10 | 33 | 132 | M25X1.5 | 500 | 40 | 112 | 112 |
| 160-280 B5 | | | | | | | | | | | | | | | | | | |
| 160M | 350 | 300 | 250 | 18.5 | 5 | 330 | 265 | 42 | M16X36 | 110 | 12 | 37 | 160 | M32X1.5 | 660 | 92 | 150 | 180 |
| 160L | 350 | 300 | 250 | 18.5 | 5 | 330 | 265 | 42 | M16X36 | 110 | 12 | 37 | 160 | M32X1.5 | 685 | 92 | 150 | 180 |
| 180M | 350 | 300 | 250 | 18.5 | 5 | 380 | 280 | 48 | M16X36 | 110 | 14 | 42.5 | 180 | M32X1.5 | 725 | 92 | 150 | 180 |
| 180L | 350 | 300 | 250 | 18.5 | 5 | 380 | 280 | 48 | M16X36 | 110 | 14 | 42.5 | 180 | M32X1.5 | 775 | 92 | 150 | 180 |
| 200L | 400 | 350 | 300 | 18.5 | 5 | 420 | 315 | 55 | M20X42 | 110 | 16 | 49 | 200 | M40X1.5 | 785 | 100 | 180 | 215 |
| 225S4 | 450 | 400 | 350 | 18.5 | 5 | 465 | 335 | 60 | M20X42 | 140 | 18 | 53 | 225 | M40X1.5 | 835 | 100 | 180 | 215 |
| 225M2 | 450 | 400 | 350 | 18.5 | 5 | 465 | 335 | 55 | M20X42 | 110 | 16 | 49 | 225 | M40X1.5 | 825 | 100 | 180 | 215 |
| 225M4-6 | 450 | 400 | 350 | 18.5 | 5 | 465 | 335 | 60 | M20X42 | 140 | 18 | 53 | 225 | M40X1.5 | 860 | 100 | 180 | 215 |
| 250M2 | 550 | 500 | 450 | 18.5 | 5 | 520 | 375 | 60 | M20X42 | 140 | 18 | 53 | 250 | M50X1.5 | 940 | 105 | 215 | 260 |
| 250M4-6 | 550 | 500 | 450 | 18.5 | 5 | 520 | 375 | 65 | M20X42 | 140 | 18 | 58 | 250 | M50X1.5 | 945 | 105 | 215 | 260 |
| 280S2 | 550 | 500 | 450 | 18.5 | 5 | 570 | 405 | 65 | M20X42 | 140 | 18 | 58 | 280 | M50X1.5 | 970 | 105 | 215 | 260 |
| 280S4-6 | 550 | 500 | 450 | 18.5 | 5 | 570 | 405 | 75 | M20X42 | 140 | 20 | 67.5 | 280 | M50X1.5 | 975 | 105 | 215 | 260 |
| 280M2 | 550 | 500 | 450 | 18.5 | 5 | 570 | 405 | 65 | M20X42 | 140 | 18 | 58 | 280 | M50X1.5 | 1010 | 105 | 215 | 260 |
| 280M4-6 | 550 | 500 | 450 | 18.5 | 5 | 570 | 405 | 75 | M20X42 | 140 | 20 | 67.5 | 280 | M50X1.5 | 1015 | 105 | 215 | 260 |
| 315-355 B5 | | | | | | | | | | | | | | | | | | |
| 315S2 | 660 | 600 | 550 | 24 | 6 | 620 | 500 | 65 | M20X42 | 140 | 18 | 58 | 315 | M63X1.5 | 1150 | 105 | 285 | 330 |
| 315S4-6 | 660 | 600 | 550 | 24 | 6 | 620 | 500 | 80 | M20X42 | 170 | 22 | 71 | 315 | M63X1.5 | 1185 | 105 | 285 | 330 |
| 315M2 | 660 | 600 | 550 | 24 | 6 | 620 | 500 | 65 | M20X42 | 140 | 18 | 58 | 315 | M63X1.5 | 1260 | 105 | 285 | 330 |
| 315M4-6 | 660 | 600 | 550 | 24 | 6 | 620 | 500 | 80 | M20X42 | 170 | 22 | 71 | 315 | M63X1.5 | 1295 | 105 | 285 | 330 |
| 315L2 | 660 | 600 | 550 | 24 | 6 | 620 | 500 | 65 | M20X42 | 140 | 18 | 58 | 315 | M63X1.5 | 1265 | 105 | 285 | 330 |
| 315L4-6 | 660 | 600 | 550 | 24 | 6 | 620 | 500 | 80 | M20X42 | 170 | 22 | 71 | 315 | M63X1.5 | 1310 | 105 | 285 | 330 |
| 355M2 | 800 | 740 | 680 | 24 | 6 | 700 | 645 | 75 | M24X50 | 140 | 20 | 67.5 | 355 | M63X1.5 | 1510 | 100 | 360 | 410 |
| 355M4-6 | 800 | 740 | 680 | 24 | 6 | 700 | 645 | 100 | M24X50 | 210 | 28 | 86 | 355 | M63X1.5 | 1640 | 100 | 360 | 410 |
| 355L2 | 800 | 740 | 680 | 24 | 6 | 700 | 645 | 75 | M24X50 | 140 | 20 | 67.5 | 355 | M63X1.5 | 1610 | 100 | 360 | 410 |
| 355L4-6 | 800 | 740 | 680 | 24 | 6 | 700 | 645 | 100 | M24X50 | 210 | 28 | 86 | 355 | M63X1.5 | 1670 | 100 | 360 | 410 |
| 355LX-400 B5 | | | | | | | | | | | | | | | | | | |
| 355LX2 | 900 | 840 | 780 | 24 | 6 | 760 | 625 | 75 | M20X42 | 140 | 20 | 67,5 | 355 | -/- | 1850 | 105 | 430 | 485 |
| 355LX4-6 | 900 | 840 | 780 | 24 | 6 | 760 | 625 | 100 | M20X42 | 210 | 28 | 86 | 355 | -/- | 1950 | 105 | 430 | 485 |
| 400 2 | 1000 | 940 | 880 | 28 | 6 | 840 | 660 | 85 | M24X50 | 170 | 22 | 76 | 400 | -/- | 1910 | 147 | 430 | 485 |
| 400 4-6 | 1000 | 940 | 880 | 28 | 6 | 840 | 660 | 120 | M24X50 | 210 | 32 | 109 | 400 | -/- | 1990 | 147 | 430 | 485 |

**Nota:** dal MEC225 incluso in su, la flangia B5 ha 8 fori di fissaggio. Dati tecnici e caratteristiche possono subire variazioni
***Note:*** *from MEC225 included onwards, the B5 flange has 8 mounting holes. Technical data and performances may change*

## 6T3 7T3 IE3 trifase / *three phase* 71÷160

71-132 B14

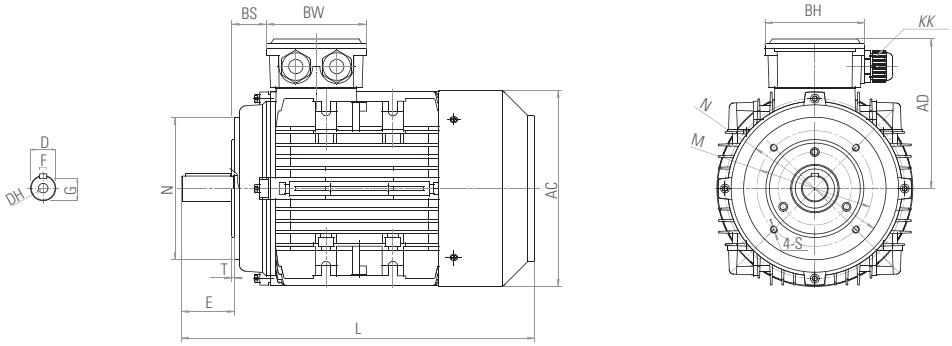


160 B14

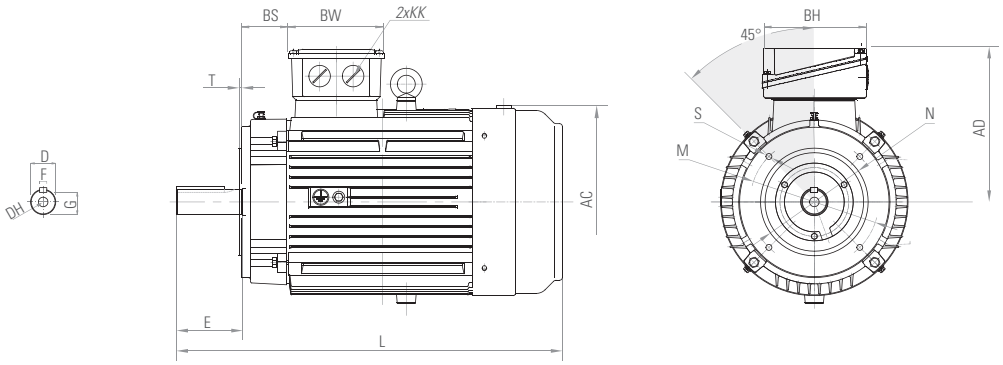


| B14 | | | | | | | | | | | | | | | | | | |
|---|---|---|---|---|---|---|---|---|---|---|---|---|---|---|---|---|---|---|
| | P | M | N | S | T | AC | AD | D | DH | E | F | G | H | KK | L | BS | BW | BH |
| 71-132 B14 | | | | | | | | | | | | | | | | | | |
| 71 | 105 | 85 | 70 | M6 | 2.5 | 145 | 112 | 14 | M5X12 | 30 | 5 | 11 | 71 | M20X1.5 | 255 | 20 | 94 | 94 |
| 80 | 120 | 100 | 80 | M6 | 3 | 165 | 130 | 19 | M6X16 | 40 | 6 | 15.5 | 80 | M20X1.5 | 277 | 27 | 105 | 105 |
| 90S | 140 | 115 | 95 | M8 | 3 | 185 | 140 | 24 | M8X20 | 50 | 8 | 20 | 90 | M20X1.5 | 312 | 26 | 105 | 105 |
| 90L | 140 | 115 | 95 | M8 | 3 | 185 | 140 | 24 | M8X20 | 50 | 8 | 20 | 90 | M20X1.5 | 337 | 26 | 105 | 105 |
| 90LB | 140 | 115 | 95 | M8 | 3 | 185 | 140 | 24 | M8X20 | 50 | 8 | 20 | 90 | M20X1.5 | 365 | 26 | 105 | 105 |
| 100L | 160 | 130 | 110 | M8 | 3.5 | 205 | 155 | 28 | M10X22 | 60 | 8 | 24 | 100 | M20X1.5 | 375 | 34 | 112 | 112 |
| 100LC | 160 | 130 | 110 | M8 | 3.5 | 205 | 155 | 28 | M10X22 | 60 | 8 | 24 | 100 | M20X1.5 | 411 | 34 | 112 | 112 |
| 112M(MB2) | 160 | 130 | 110 | M8 | 3.5 | 230 | 166 | 28 | M10X22 | 60 | 8 | 24 | 112 | M25X1.5 | 400 | 34 | 112 | 112 |
| 112MB | 160 | 130 | 110 | M8 | 3.5 | 230 | 166 | 28 | M10X22 | 60 | 8 | 24 | 112 | M25X1.5 | 417 | 34 | 112 | 112 |
| 132S | 200 | 165 | 130 | M10 | 3.5 | 270 | 188 | 38 | M12X28 | 80 | 10 | 33 | 132 | M25X1.5 | 460 | 40 | 112 | 112 |
| 132M | 200 | 165 | 130 | M10 | 3.5 | 270 | 188 | 38 | M12X28 | 80 | 10 | 33 | 132 | M25X1.5 | 500 | 40 | 112 | 112 |
| 160 B14 | | | | | | | | | | | | | | | | | | |
| 160M | 250 | 215 | 180 | M12 | 4 | 330 | 265 | 42 | M16X36 | 110 | 12 | 37 | 160 | M32X1.5 | 660 | 92 | 150 | 180 |
| 160L | 250 | 215 | 180 | M12 | 4 | 330 | 265 | 42 | M16X36 | 110 | 12 | 37 | 160 | M32X1.5 | 685 | 92 | 150 | 180 |

**Nota:** il MEC71 B14 ha 8 fori di fissaggio. Dati tecnici e caratteristiche possono subire variazioni
***Note:*** *MEC71 B14 has 8 threaded holes. Technical data and performances may change*